LEENDERS

SINCE 1979

# MATS

## DATASHEET

EN

NL

DE

FR

LEENDERS
SINCE 1979

# MATS

## TECHNICAL DOCUMENTATION FOR SOLID FUEL LOCAL SPACE HEATERS

| | |
|---|---|
| **Manufacturer** | **Harrie Leenders Haardkachels B.V., Industrieweg 25, 5688 DP Oirschot, The Netherlands** |
| **Model identifier** | **MATS** |
| Equivalent models | - |
| Test report nr. | *1639-AoP-EZKA/2025-11/006-6* |
| Harmonized European standard | *EN16510-2-1:2022* |
| Indirect heating function | *No* |
| Direct heat output (kW) | *8,0* |
| Indirect heat output (kW) | - |
| Air tightness class | *Type BF* |

| | |
|---|---|
| **General description** | *Freestanding solid fuel local space heater without hot water supply* |
| **Specific precautions for assembly, intallation or maintenance** | *Precautions for assembly, installation and maintenance are described in:*<br>*- Installation instructions*<br>*- Instructions for use & maintenance* |
| **Calculations** | *EEI = (μS,on . BLF) - 10 % + F(2) + F(3) - F(4) - F(5)*<br>*μS,on = μth,nom*<br>*'ηs = ηnom - 10% + F(2) + F(3) - F(4) - F(5)* |
| **Testing conditions** | *Tested according:*<br>*EN16510-2-1:2022* |

| **Fuel** | Preferred fuel (only one) | Other suitable fuel(s) | Emissions at nominal heat output [mg/Nm³ (13 % O²) | | | | Emissions at minimum heat output [mg/Nm³ (13 % O²) | | | |
|---|---|---|---|---|---|---|---|---|---|---|
| | | | PM | OGC | CO | NOx | PM | OGC | CO | NOx |
| Wood logs, moisture content < 25 % | *Yes* | *No* | *36* | *68* | *1129* | *101* | *N/A* | *N/A* | *N/A* | *N/A* |
| Compressed wood, moisture content < 12 % | *No* | *Yes* | *36* | *68* | *1129* | *101* | *N/A* | *N/A* | *N/A* | *N/A* |
| Other woody biomass | *No* | *No* | | | | | | | | |
| Non-woody biomass | *No* | *No* | | | | | | | | |
| Anthracite and dry steam coal | *No* | *No* | | | | | | | | |
| Hard coke | *No* | *No* | | | | | | | | |
| Low temperature coke | *No* | *No* | | | | | | | | |
| Bituminous coal | *No* | *No* | | | | | | | | |
| Lignite briquettes | *No* | *No* | | | | | | | | |
| Peat briquettes | *No* | *No* | | | | | | | | |
| Blended fossil fuel briquettes | *No* | *No* | | | | | | | | |
| Other fossil fuel | *No* | *No* | | | | | | | | |
| Blended biomass and fossil fuel briquettes | *No* | *No* | | | | | | | | |
| Other blend of biomass and solid fuel | *No* | *No* | | | | | | | | |

| **Characteristics when operating with the preferred fuel** | |
|---|---|
| Seasonal space heating efficiency ηs [%] | *71,4* |
| Energy efficiency index (EEI) | *107,6* |

| | Symbol | Value | Unit |
|---|---|---|---|
| **Heat output** | | | |
| Nominal heat output | *Pnom* | *8,0* | *kW* |
| Minimum heat output (indicative) | *Pmin* | *N/A* | *kW* |
| **Useful efficiency (NCV as received)** | | | |
| Useful efficiency at nominal heat output | *ηth,nom* | *80,4* | *%* |
| Useful efficiency at minimum heat output (indicative) | *ηth,min* | *N/A* | *%* |
| **Auxilliary power consumption** | | | |
| At nominal heat output | *elmax* | *N/A* | *kW* |
| At minimum heat output | *elmin* | *N/A* | *kW* |
| In standby mode | *elSB* | *N/A* | *kW* |
| **Permanent pilot flame power requirement** | | | |
| Pilot flame power requirement (if applicable) | *Ppilot* | *N/A* | *kW* |

| **Type of heat output/room temperature control (select one)** | |
|---|---|
| Single-stage heat output, no room temperature control | *No* |
| Two or more manual stages, no room temperature control | *Yes* |
| With mechanic thermostat room temperature control | *No* |
| With electronic room temperature control | *No* |
| With electronic room temperature control plus day timer | *No* |
| With electronic room temperature control plus week timer | *No* |

| **Other control options (multiple selection possible)** | |
|---|---|
| Room temperature control, with presence detection | *No* |
| Room temperature control, with open window detection | *No* |
| With distance control option | *No* |

| | |
|---|---|
| Power range: min./ max per hour [1]<br>Vermogensbereik; min./max. per uur<br>Leistungbereich; min.max. pro Stunde<br>Plage d'utilisation, puissance min./max. par heure | 3.5-9 kWh |
| Fuel requirement per hour, min./max. [2]<br>Navul hoeveelheid per uur, min./max.<br>Holzaufgabemenge pro Stune, min./max.<br>Charge de bois par heure, min./max. | 1-3 kg |
| Weight<br>Gewicht<br>Gewicht<br>Poids | 210 kg |
| Efficiency<br>Rendement<br>Wirkungsgrad<br>Rendement | 80.4% |
| Energy Efficiency Class<br>Energie Efficientie Klasse<br>Energie Effizienz Klasse<br>Classe d' efficacité énergétique | A+ |
| Energy Efficiency Index<br>Energie Efficientie Index<br>Energie Effizienz Index<br>Index d' efficacité énergétique | 108,6 |
| Dust<br>Stof<br>Staub<br>Poussieres fines | 36 mg/Nm3 |
| CO | 0.09 % |
| Information for chimney calcullation<br>Informatie voor schoorsteenberekening<br>Information für den Schornsteinfegermeister<br>Information pour le calcul de conduit et de tirage de cheminée | 8.0 kW<br>6.7 g/s<br>329 °C<br>0.09 % CO<br>0.123 mbar |
| EN 16510<br>Art.15a B-VG<br>VKF<br>BImschV. Stufe 2<br>Flamme Rucola<br>Smoke Control | 1639-AoP-EZKA/2025-11/006-6<br>☑<br>☑<br>☑<br>☑<br>☐ See Mats smoke control |

A+

[1]
The minimum power is required to keep the stove at operating temperature.
Het minimale vermogen is nodig om de haard op bedrijfstemperatuur te houden.
Die minimale Leistung ist notwendig, damit die Betriebstemperatur des Kaminofens aufrechterhalten bleibt.
Une puissance minimum est nécessaire pour maintenir le poêle à une bonne température de fonctionnement.

[2]
At 80% efficiency, 1kg of wood with 15% rest moist, gives of approx. 3,5kW energy.
Bij een rendement van 80%, geeft 1kg stookhout met 15% restvocht, ongeveer 3,5kW energie.
Bei einem Wirkungsgrad von 80%, ergibt 1 kg Holz mit 15% Restfeuchtigkeit etwa 3,5kW Energie.
Avec un rendement de 80%, 1kg de bois avec un taux d'humidité de 15% délivre environ 3,5 kW de énergie.

| | |
|---|---|
| Color variations body<br>Kleurvariaties body<br>Farbvariationen Body<br>Les variations de couleur body | black/antracite<br>zwart/antraciet<br>schwarzanthrazit<br>noir/anthracite |
| Color side tiles<br>Kleur zijstenen<br>Farb Seitensteine<br>Couleur réfractaires latérales | black/anthracite<br>zwart/antraciet<br>schwarz/anthrazit<br>noires/anthracites |
| Flue Diameter<br>Diameter afvoer<br>Anschlussdurchmesser<br>Diamètre de conduit | Top + rear Ø150mm<br>Boven + achter Ø150mm<br>Oben + hinten Ø150mm<br>Dessus + arrière Ø150mm |
| Rotatable top flue<br>Draaibaar bovenafvoer<br>Drehbar mit Anschluss oben<br>Sortie dessus pivotable | - |
| Rotatable rear flue<br>Draaibaar achterafvoer<br>Drehbar mit Anschluss hinten<br>Sortie arriere pivotable | - |
| Plus heat storage<br>Plus stenen set<br>Plus Speicherset<br>Ceramiques d'accumultion | 12h -> 40 °C |
| Fresh air supply<br>Verse luchtvoorziening<br>Frischluftzufuhr<br>Prise d'air | in base: to wall or floor<br>in voet: naar wand of vloer<br>im Fuß: zum Wand oder Boden<br>à pied: par le mur et le sol |
| Possibility to level foot<br>Voet waterpas te stellen<br>Fuss mit Wasserwaage ausrichten<br>Mise à niveau du pied | ☑ |

**Fresh air supply/verse luchtvoorziening/Frischluftzufuhr/prise d' air**

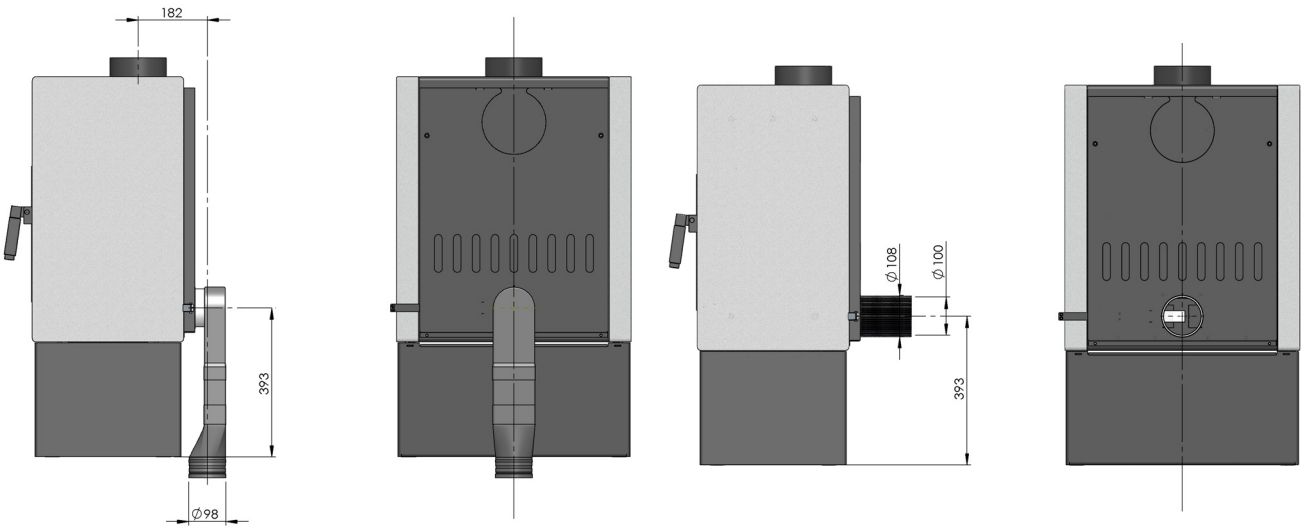

Minimale afstanden ter bescherming van brandbare materialen
Minimum distances for the protection of combustible materials
Mindestabstände zum Schutz brennbarer Materialien
Distances minimales pour la protection des matériaux combustibles

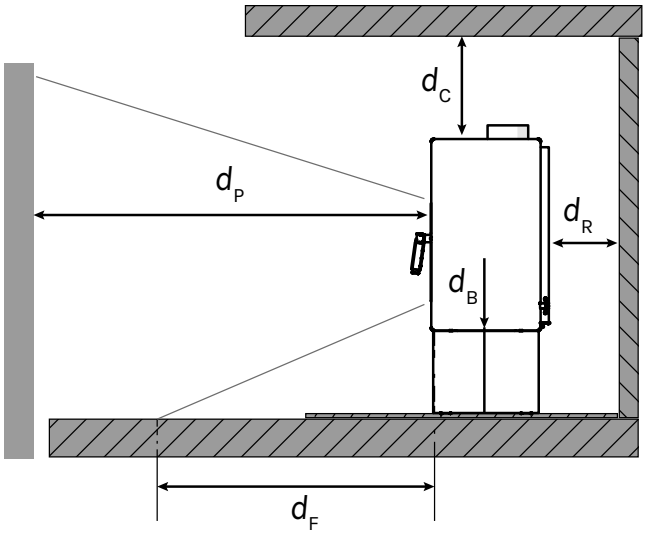


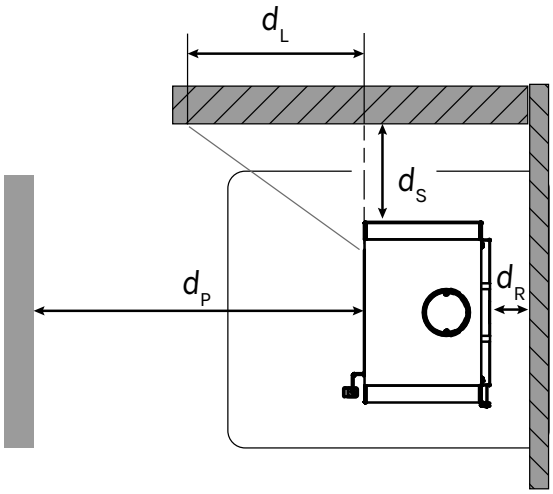


Rondom de kachel
Around the appliance
Rund um den Kaminofen
Autour du poêle

| | |
|---|---|
| $d_B$ | 0 mm |
| $d_R$ | 250 mm |
| $d_S$ | 300 mm |
| $d_C$ | 750 mm |

Voor de kachel
In front of the appliance
Vor dem Kaminofen
Devant le poêle

| | |
|---|---|
| $d_F$ | 1500 mm |
| $d_P$ | 1500 mm |
| $d_L$ | 1500 mm |

flammable
brandbaar
brennbar
inflammable

nonflammable
onbrandbaar
nicht brennbar
ininflammable

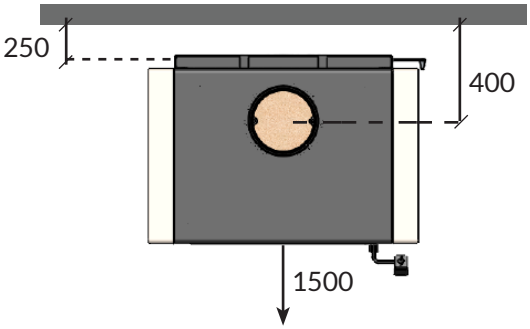


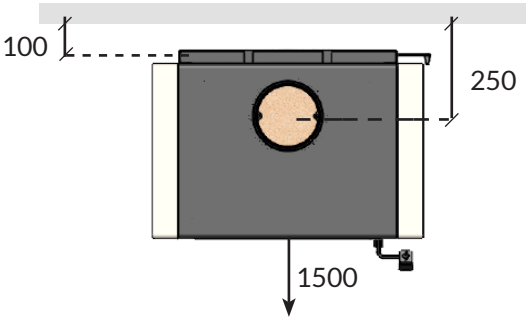


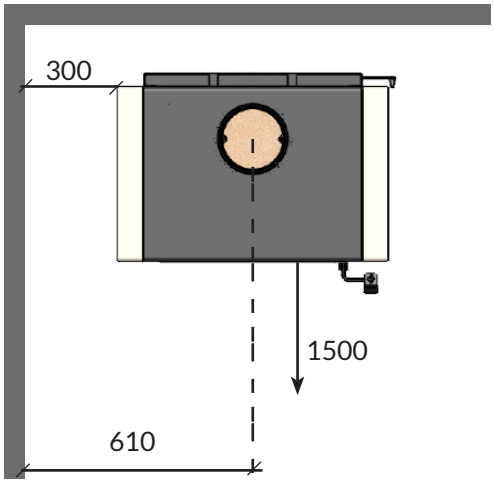


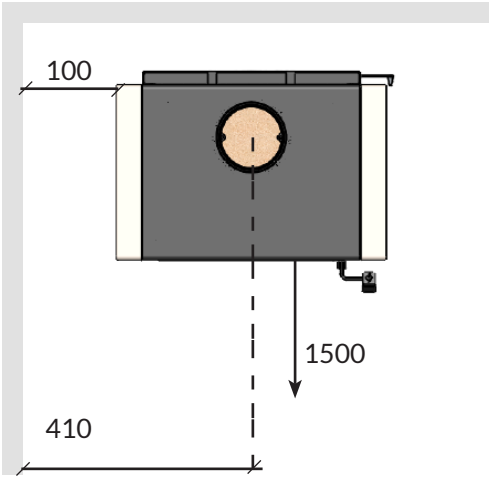


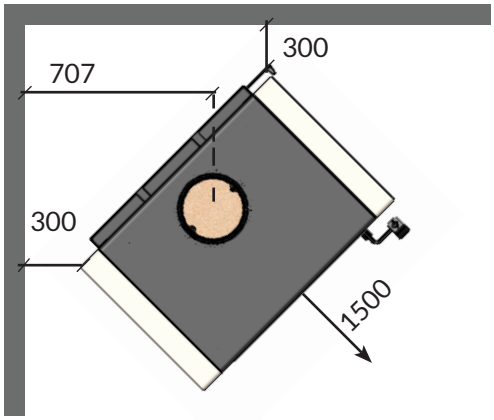


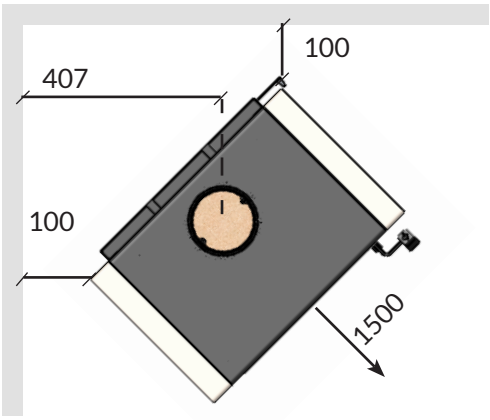

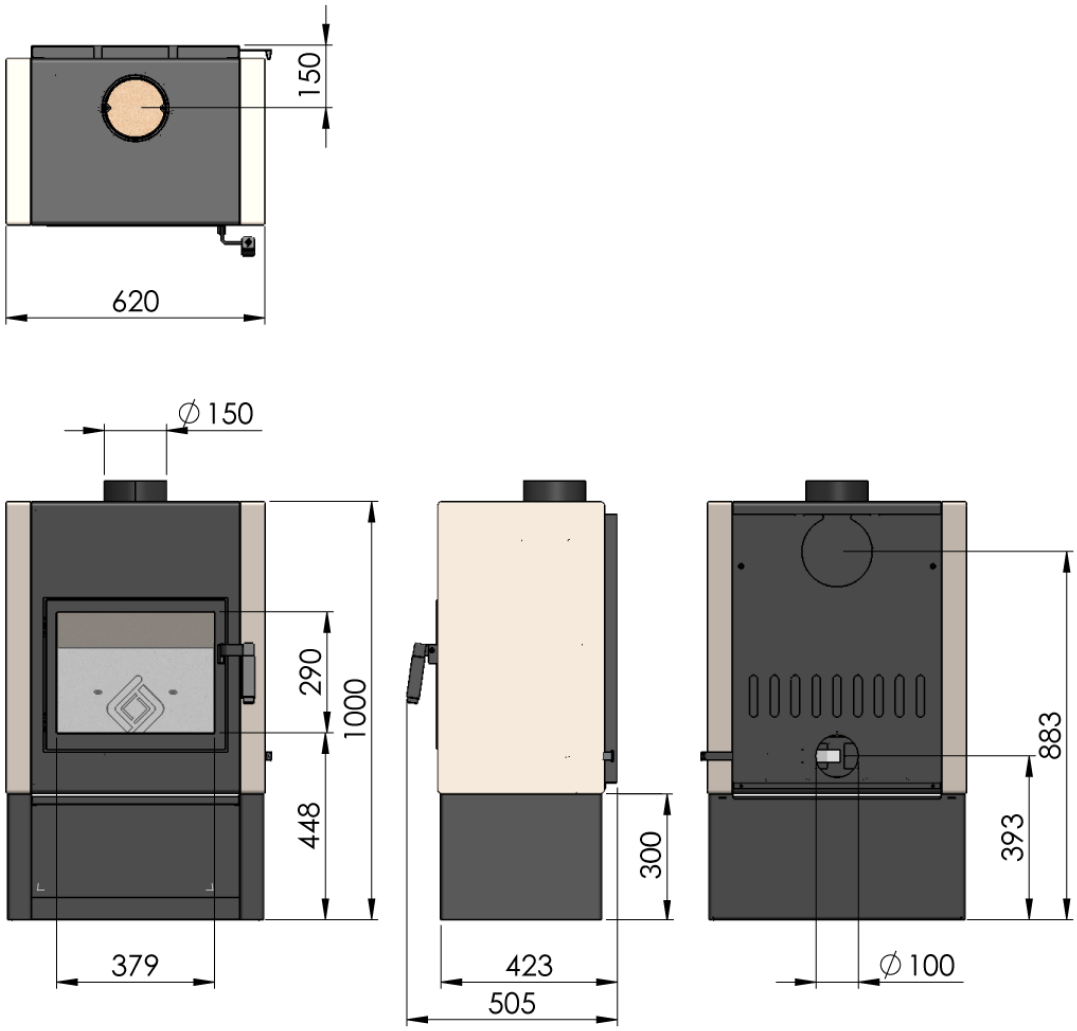


| | | | | |
|---|---|---|---|---|
| Toleranties tenzij anders vermeld: ↔ :±0,5 mm ∠ :± 1° ⊥ :± 1° | Afwerkingsgraad oppervlaktes conform HLH LFS norm | Afwerkingsgraad oppervlaktes tenzij anders vermeld: H4 | Project Mats | Assembly no. - |
| | A4 Units MM | Proj. | Titel Mats | |
| LEENDERS SINCE 1979 | | Getekend RS | Datum 21-08-2014 | HLH tekening nummer 43900 aanzichten / Revisie 3 |
| | | Blad 1 - 2 | Schaal 1:15 | |
| | | Type A | Gewicht 215 kg | Status DEF. / Gecontroleerd |